VIEWS ON THE SUBJECT OF MULTILEVEL CONTROL

Irving Lefkowitz

April 1975 WP-75-34

This paper was prepared for a Workshop Conference on Multilevel Control Problems sponsored by the Institute of Automatic Control, Technical University of Warsaw, Warsaw, Poland. The Conference was held 29-31 January, 1975.

Working Papers are not intended for distribution outside of IIASA, and are solely for discussion and information purposes. The views expressed are those of the author, and do not necessarily reflect those of IIASA.

VIEWS ON THE SUBJECT OF MULTILEVEL CONTROL

Prof. Irving Lefkowitz

INTRODUCTION

The Chairman, Prof. Findeisen, was very kind in proposing the title of my talk, "Views on the Subject of Multilevel Control" as it gave me a broad mandate on what I could choose to talk about.* Of course, in preparing my remarks, I was faced with the problem of selecting those aspects of the subject to stress that would least likely duplicate what he himself would be saying in his Introduction. Fortunately, as it turns out, the overlap of our talks is minimal.

The title indeed suggests that my remarks be more philosophical than technical, more general and broad brush than detailed and specialized. I will, nevertheless, take the liberty of limiting the scope of my talk somewhat in order to focus very specifically on some problems related to the application of multilevel concepts and techniques to control of complex industrial systems.

In the control of industrial systems, we consider the overall goal to be, in a very general sense, the efficient utilization of resources (e.g. material, energy, environmental, labor, cap-

---

*I interpret the label *multilevel* as denoting the general class of multigoal, multilevel hierarchical structures as defined by Mesarovic.[1] In subsequent sections a more specialized meaning will be assigned to *multilevel control* as distinguished from *multilayer control*.

ital) in the production of products satisfying quality specifications and consistent with goals and constraints which may be imposed by society. Thus, we are concerned with the broad spectrum of decision-making and control functions (e.g. process control, operations control, scheduling, planning, etc.) which play a role in the effective operation of the system with respect to its production goals. The control problem in this generalized context is extremely difficult to handle; we formulate various multilevel/multilayer, hierarchical structures to provide rational and systematic procedures for resolving the problem.

MULTILEVEL STRUCTURE

Much of the effort in multilevel theory has been oriented to the problem of optimization of large complex systems.[1,2,3] The approach is based on the idea that we can decompose the overall system problem into a number of smaller, easily handled subsystem problems, then compensate for the interactions among the subsystems by a coordinating function. In essence, the coordinator (second level) motivates an iterative procedure by which the sub-problem solutions (first level) converge (hopefully) to the optimum for the overall system. Thus, if R is the number of iterations required (on average) for the solution to converge to within a reasonable neighborhood of the optimum, N is the number of subsystems, C_o is the mean cost of solving the overall problem, C_{1i} is the mean cost of each solution of the ith subsystem problem, and C_2 is the cost of each iteration of the coordinating function, then the implication of the two-level solution process is that

$$C_2 + \sum_{i=1}^{N} C_{ij} < \frac{C_o}{R} \qquad (1)$$

In the on-line control application, it is only the final result of the iterative process that is transmitted to the plant. Thus, the entire multilevel structure described above would be internal to the computational block generating the opti-

mum control. Since the computation normally depends on the current value of the disturbance vector affecting the plant, and this changes with time, much of the advantage of decomposition may be lost due to frequent repetition of the iterative process of coordination. If the system is decomposed along lines of weak interaction and if the coordination scheme is selected so that intermediate results are always plant feasible, then the multilevel structure provides the basis for a decentralized control wherein: (a) the first-level controllers compensate for local effects of the disturbance, e.g. maintain local performance close to the optimum while ensuring that local constraints are not violated; (b) the second-level controller compensates for the mean effect of changes in the interaction variables on overall performance. The desired result is a significant reduction in the cost of achieving control through reductions in the required frequency of second-level action and in data transmission requirements.

The effect of the disturbance input is to cause a degradation of plant performance ΔP. If we denote T_i, $i = 0,1,2$ as the mean period of control action at the ith level,* $\overline{\Delta P}_i(T_i)$ is the mean performance degradation resulting from the fact that the ith level control action is carried out with period T_i (i.e. the action is not performed continually or every time there is a disturbance change), C_o, C_{1i}, C_2 are as defined in Eqn.(1), then we assume the following inequality holds:

$$\frac{1}{T_1}\sum_{i=1}^{N} C_{1i} + \overline{\Delta P}_1(T_1) + \frac{C_2}{T_2} + \overline{\Delta P}_2(T_2) < \frac{C_o}{T_o} + \overline{\Delta P}_o(T_o) \qquad (2)$$

More to the point, we may consider the design problem of the multilevel system consisting of (i) determining the lines of decomposition and the formulations of the subsystem problems

*The subscript "o" denotes here the solution of the overall problem as a whole (without decomposition).

and (ii) choice of periods T_1 and T_2, so that the lefthand side of the inequality (2) is minimized.

The discussion of the two-level structure readily generalizes to the L-level case, $L > 2$. As an illustrative example, we show in Fig. 1 a four-level hierarchical structure representative of a modern steel works. We note the following observations:

1) The "zeroth" level denotes the actual plant production units of the steel works. Associated with each plant unit are (i) disturbance inputs, (ii) interaction inputs (i.e. couplings with other units), and (iii) control inputs generated by the local decision-maker/controller (first-level controller).

2) The organizational structure of the superimposed decision-making and control system is largely motivated by technological considerations of steel-making practice which have evolved over time. An important consequence of this evolutionary process is the identification and development of the lines of weak interaction which define the subsystem boundaries.

3) The combination of controller with its infimal subsystems identifies a new subsystem with respect to the supremal controller (coordinator). This is exemplified by Fig. 2 a,b: the Rolling Mill with its (1st level) controller identifies the Rolling Mill Subsystem with respect to the Hot Strip Mill control function (2nd level); similarly, with respect to the Steel Processing Plant control function (3rd level), the coupling of Hot Strip Mill Controller with its infimals, viz. Slab Yard Subsystem, Reheat Furnace Subsystem, Rolling Mill Subsystem, etc. form the Hot Strip Mill Subsystem.[9] In each case, the structure is the same with the supremal unit responsible for compensating the effects of interactions among the infimal subsystems.

4) Imbedded within the structure are various feedbacks which, in effect, tend to reduce the sensitivity of the system performance to disturbance inputs.

MULTILAYER STRUCTURE

A complementary approach to the problem of optimizing control of large complex systems is provided by the multilayer hierarchical structure [2,4,5,]. Here, the original problem is replaced by a set of simplified and approximate subproblem formulations; integration of the subproblem solutions to satisfy the objectives and requirements of the original problem is achieved via information feedback from the operating system.

Some comments are in order:

1) The first-layer (direct control) function plays the role of implementing the decisions of the second-layer (optimizing) function. It also serves the purpose of (a) suppressing various disturbance inputs with respect to the 2nd-layer problem and, (b) suppressing transient effects so that static (rather than the more complex dynamic) models may be used for the higher layer problems to good approximation.

2) The 2nd-layer optimization problem is solved in terms of a simplified model of the system. Part of the simplification is realized by restricting consideration to only the dominant disturbance effects relevant to the performance objective.

3) The third-layer (adaptive) function provides for updating of the parameters of the model to reflect current experience with the operating system. This means that we can eliminate from the problem formulation factors which are not of primary significance, which tend to vary slowly or tend to change infrequently, since these factors (disturbances) may be compensated through the adaptive function.

4) Finally, a fourth-layer (evaluation and self-organization) function is identified as the mechanism for inputting into the system external considerations, e.g. economic factors,

as well as overall evaluation of performance which may lead, generally, to modification of the structure of the control system.

5) Although, the multilayer hierarchy was motivated by considerations of continuous process systems, the underlying principles apply equally well to control of batch processes, semi-continuous processes, etc.[6].

TEMPORAL MULTILAYER HIERARCHY

In this formulation of the hierarchy, the layers are distinguished in terms of the relative frequency of control action or decision making. Three factors motivate this structure: (a) basic response time or horizon for the underlying decision process; (b) frequency characteristics of the disturbances instigating control action; (c) cost/benefit trade-off between the cost of carrying out a control action versus the performance degradation of the plant resulting from not exercising control [7,8].

The structure of the system is shown in Fig. 3. The block G represents a measurement and data processing unit which transforms the raw input and output data into information vectors denoted by x_i. The vector m is partitioned to form subsets of control (decision) variables $m_1, m_2, \ldots m_L$, where m_i is updated by the i-th layer control function F_i acting with mean period T_i, where it is assumed that $T_i > T_{i-1}$, $i=1,2,\ldots L$. The i-th layer control implies the transformation

$$m_i = F_i(m_{i+1}, x_i) \qquad (3)$$

The function F_i may represent the result of an optimization or merely a heuristic decision rule based on operating experience.

There are several general features to be noted about the structure of Fig. 3.

1) The controls are coupled as indicated by Eqn. (3). Thus, the action at the i-th layer depends on the prior decision at the (i+1)th layer. There is also interaction in the other direction; it is assumed, however, that the coupling is weak so that the i-th layer decision-making may proceed on the basis of averaged properties of the lower layer actions.

2) The decision-making horizon tends to increase progressively as we proceed up the hierarchy (consistent with the increase of T_i with i). Thus, the structure accommodates very naturally the spectrum of decision-making functions typical of production systems, e.g. process control, operations control, daily schedule, weekly schedule, monthly plan, yearly plan, long range plan, etc.

3) The control functions of the multilevel and multilayer hierarchies previously described may also be encompassed by the temporal hierarchy in the sense that these functions are characteristically ordered with respect to time scale, frequency of action, degree of aggregation, and related attributes.

4) As we go from the i-th to the (i+1)th layer, the model tends to get less detailed and more based on aggregated properties of the system.

We may formalize the cost/benefit tradeoff problem to provide a rational basis for design choices regarding the multilayer hierarchy. Thus, we may consider the design objective:

$$\max_{h \in H} \{\bar{P}(h) - \bar{C}(h)\} \qquad (4)$$

where H denotes the set of available design choices, $\bar{P}(h)$,$\bar{C}(h)$ denote the mean plant performance and the mean cost of control, respectively, resulting from design choice h. Note that the cost term may include consideration of costs of measurement, data processing, computation, and implementation of the control action. Design decisions under H include the

identification of the subsets m_i, the determination of T_i (for periodic control policies) or the determination of update criteria (in the case of "on-demand" control policies).

DISTILLATION COLUMN EXAMPLE

The concepts presented above are illustrated with reference to a (somewhat generalized) interpretation of control of a simple distillation column. A schematic of the column is shown in Fig. 4. The basic function of the column is to separate a liquid mixture into two product streams, one richer in the more volatile component(lower boiling point) of the mixture, the other in the less volatile component*.

A number of trays, spaced vertically over the height of the column provide for repeated interchange of thermal energy and matter between a vapor flow rising up the column and a liquid flow going down the column. Feed enters at the feed tray which is located at some intermediate point in the column. Energy for the separation (we assume here in the form of process stream) is introduced at the base of the column, providing vapor which, as it rises up column, becomes progressively richer in the more volatile component of the feed. The vapor stream leaves the column at the top and is condensed; part of the condensate is returned to the column as reflux, the remainder forms the distillate product. The reflux provides a liquid stream which flows down the column countercurrent to the vapor stream, becoming progressively less concentrated with respect to the more volatile component. Liquid accumulating at the bottom of the column is drawn off as the bottoms product. We assume, for the example, that the main product is the distillate and that the bottoms flow represents a waste or a by-product to be further processed.

The concentration of the product streams, x_B, x_D, respectively, are determined by the distribution of material in the

*We will assume for simplicity that the feed consists of only two components, with perhaps some minor components treated as impurities.

column which, in turn, is determined by the heat input flowrate, F_Q, and the reflux flowrate, F_R. We assume that because of the difficulty in getting on-line measurements of product composition and because of the excessive time lag in the response of x_D to changes in column conditions, it is necessary to base the feedback control on temperature measurements at the top and bottom sections of the column, T_D and T_B, respectively. It is noted, however, that the temperatures are not simple related to the product compositions but are affected by column pressure and by impurities in the feed stream. A simple linearized model is used to provide a pressure correction term to the temperature measurements.

The process control system is outlined in Fig. 4. In addition to the features identified above, there are also the following: (i) cascade control of F_R and F_Q with the set-points determined by T_D and T_B, respectively. (ii) feedforward control on F_R and F_Q based on a linearized model predicting the effects of feedflowrate variations on column operation (assuming the feed rate to be the dominant disturbance input). (iii) a cascade control loop determining the set-point for T_D based on feedback of periodic laboratory measurements of x_D. (iv) an optimizing control wherein the heat input rate is determined based on considerations of minimizing column operating costs (for energy primarily) subject to satisfying column constraints and perhaps also conditional on ensuring that the probability of x_D deviating from its desired value will be less than some given limit.

The control functions for the distillation column have been organized according to the multilayer hierarchy discussed in the preceeding section and are summarized in Table I. We note that many aspects of the classification are arbitrary and may vary with the particular application. Note, further that the functions identified in the structure are not necessarily automated;indeed, as we go to the higher layers

there is increased tendency for the decision-making to be carried out by the human, aided perhaps by a computer processing of the relevant information.

The following notation (in addition to that given above) is used in Figure 4 and Table I: V=signal to flow control valve, F=flowrate (measured); subscripts R and Q refer to reflux stream and heat input rate, respectively; asterisk denotes setpoint or desired value of the variable, $||\cdot||$ denotes some appropriate norm value, e.g. mean square value.

SUMMARY REMARKS

Apart from its application as a computational technique in solving certain classes of optimization problems, the multilevel hierarchy (in its broad context) provides a very useful conceptual approach for the design and implementation of control of complex industrial systems. It provides the structure by which feedback of information relevant to the achieving of overall system goals is effectively organized. It also provides the basis for system integration via coordination of the various control and decision-making functions so that they can contribute maximally to overall performance. Further, it provides the motivation and framework for imbedding within the design some considerations of cost/benefit tradeoffs in control through use of approximate models, aggregate variables and other means for reducing the complexity of information processing and computational problems. Finally, the hierarchy provides the basis for rational utilization of information in making decisions and in implementing control actions, where the primary consideration is the nature of the transformation of information to decisions/actions rather than the means by which the transformation is carried out, e.g. whether it be by a machine, by a human, or by the two working together.

REFERENCES

1. Mesarovic, M.D., Macko, D., Takahara, Y., Theory of Hierarchical Multilevel Systems, Academic Press, New York, 1970.

2. Findeisen, W., Multilevel Control Systems (in Polish), Panstwowe Wydawnictwo Naukowe, Warsaw, 1974.
3. Wismer, D.A. ed., Optimization Methods for Large-Scale Systems, J.D. Schoeffler: "Multilevel Systems and Decomposition for the Solution of Static Optimization Problems"; Decomposition and Multilevel Methods for On-line Computer Control of Industrial Processes", McGraw Hill, New York, 1971.
4. Lefkowitz, I., "Multilevel Approach Applied to Control System Design" ASME J. OF BASIC ENGR. VOL. 88 (1966), 392-398.
5. Findeisen, W., Lefkowitz, I., "Design and Application of Multilayer Control", PROC. FOURTH IFAC CONGRESS, Warsaw, 1969.
6. Lefkowitz, I., Schoeffler, J.D., "Multilevel Control Structures for Three Discrete Manufacturing Processes", PROC. FIFTH IFAC CONGRESS, Paris, 1972.
7. Donoghue, J.F., Lefkowitz, I., "Economic Tradeoffs Associated with a Multilayer Control Strategy for a Class of Static Systems", IEEE TRANS. ON AUTO. CONT., Vol. AC-17 (1972), 7-15.
8. Tsuji, K., Lefkowitz, I., "On the Determination of an On-Demand Policy for a Multilayer Control System", PROC OF THE JACC, Austin, 1974.
9. Matuszewski, J.P. "A Study of Coordination Applied to Control in Steel Processing" Systems Research Center Report SRC 71-2, 1971, Case Western Reserve University, Cleveland, Ohio.

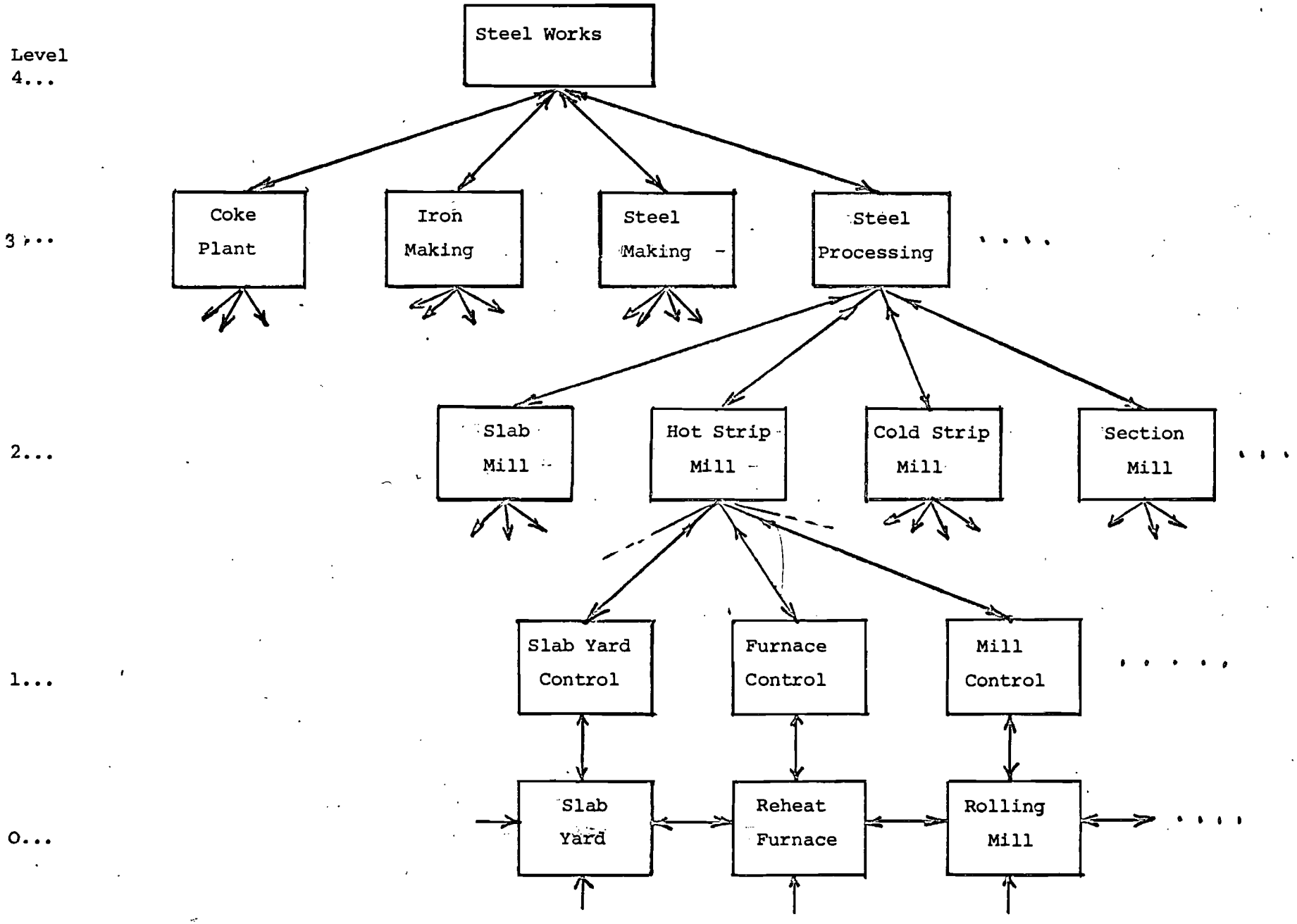

Figure 1: Multilevel Structuring of Steel Works Control System

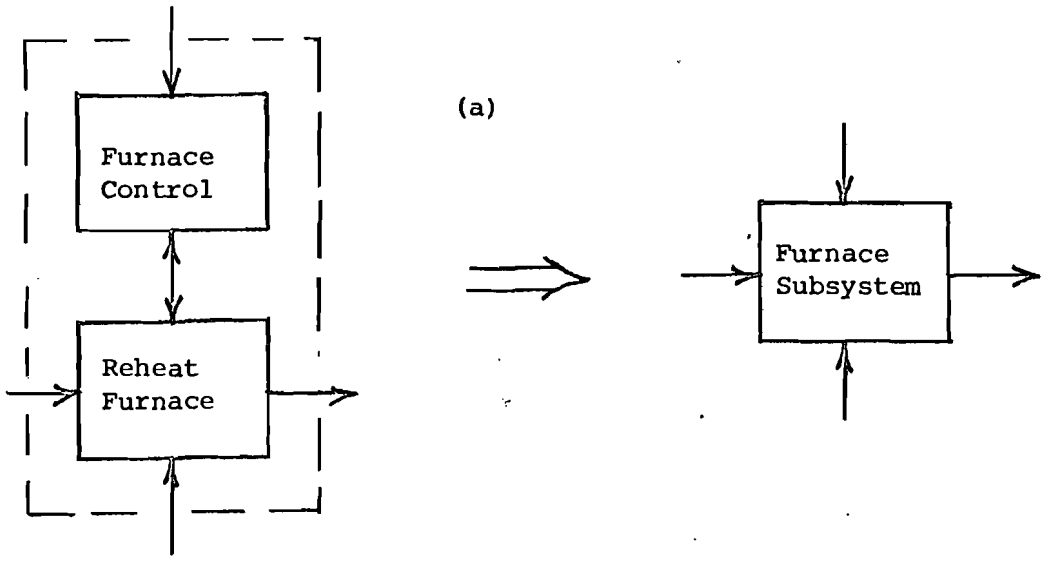

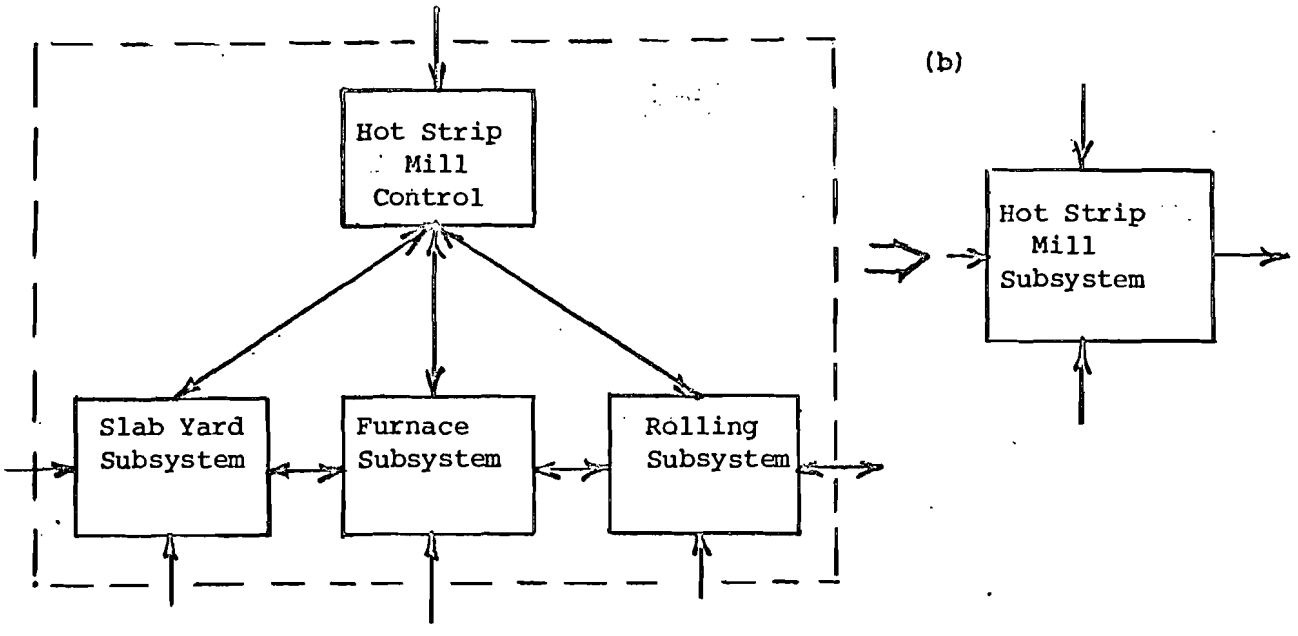

Figure 2: Aggregation of Elements in Multilevel Structure

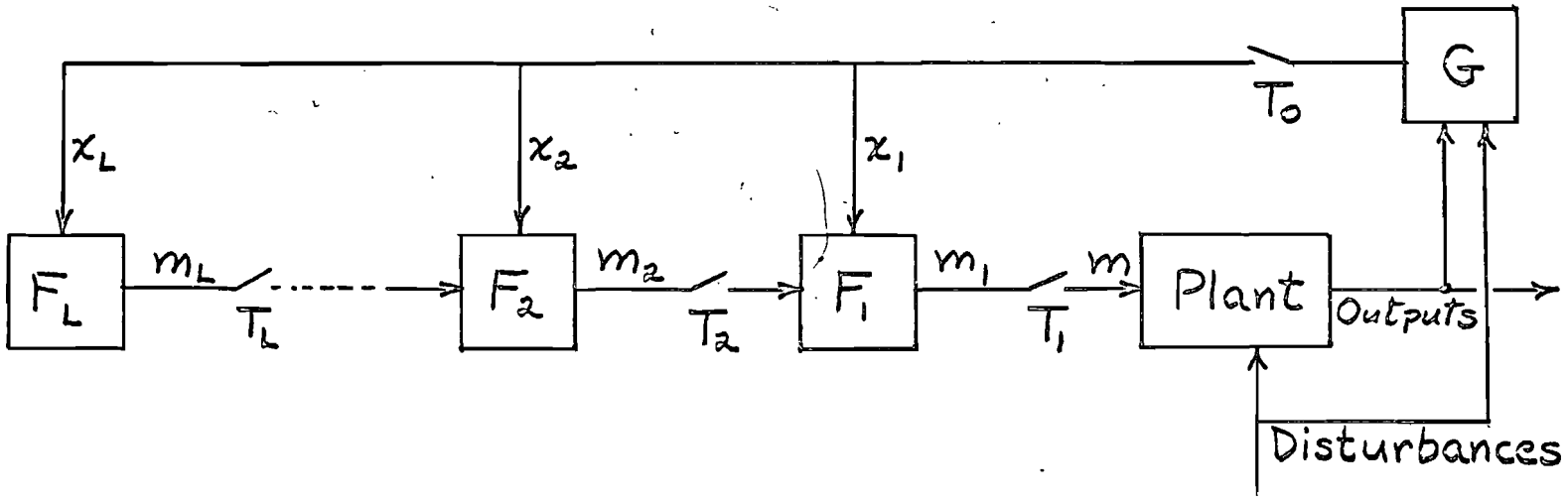

Figure 3: Temporal Multilayer Hierarchy

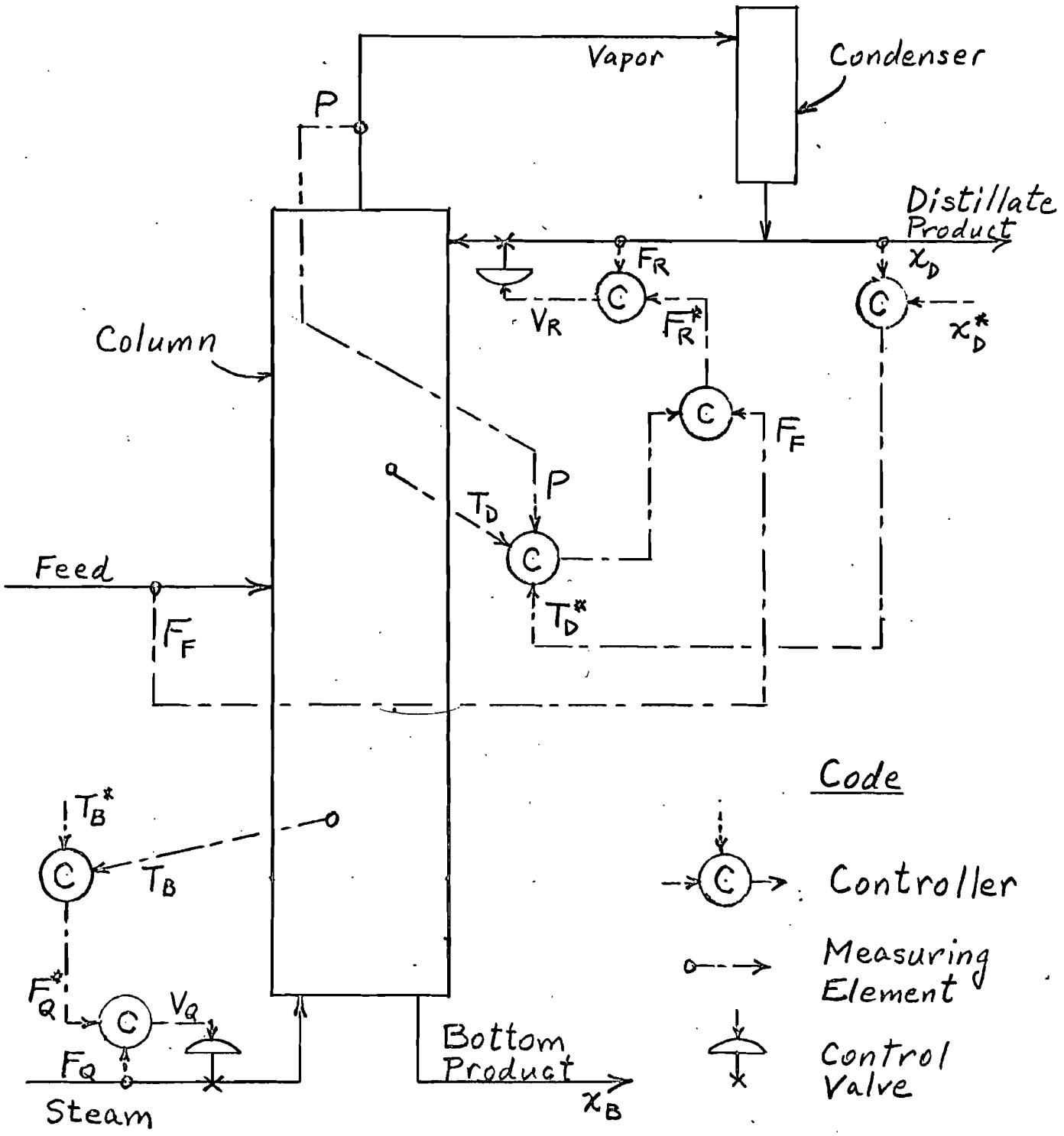

Figure 4: Distillation Column with Controls

TABLE I MULTILAYER HIERARCHY FOR DISTILLATION COLUMN EXAMPLE

LAYER	PERIOD	DECISION/CONTROL VARIABLE	OBJECTIVE	TYPICAL DISTURBANCES
1	second	V_R	$\min\|\|F_R^*-F_R\|\|$	Column pressure, pump head, reflux properties
		V_Q	$\min\|\|F_Q^*-F_Q\|\|$	Column pressure, steam pressure
2	minute	F_R^*	$\min\|\|T_D^*-T_D\|\|$	Feed flowrate & temperature, column pressure
		F_Q^*	$\min\|\|T_B^*-T_B\|\|$	Feed flowrate & temperature, column pressure
3	hour	T_D^*	$\min\|\|x_D^*-x_D\|\|$	Feed composition, column efficiency
		T_B^*	Min. operating costs	Feed composition, column efficiency
4	day	x_D^*	Max. profit, satisfy external constraints	Economic factors, market conditions
		Feed tray location	Max. column efficiency	Major change in feed, product specifications
		Parameters of feedforward & pressure correction models	Improve fit for current operating conditions	Major change in feed, column operation
5	week	Parameters of optimization model	Adapt model according to observed column behavior	Major changes in operations, column efficiency
6	month	Shutdown for cleaning & repairs	Restore normal operating characteristics	Fouling of trays, leaks, etc.
7	year	Modification of control algorithms structure	Improve system performance	Reassessment of system performance
		Replacement of equipment	Improve system performance	Obsolescence, technological development